Pratissoli

and

THE NEW MXS - MXX

The project, scopes and features of a unique new line of pumps.

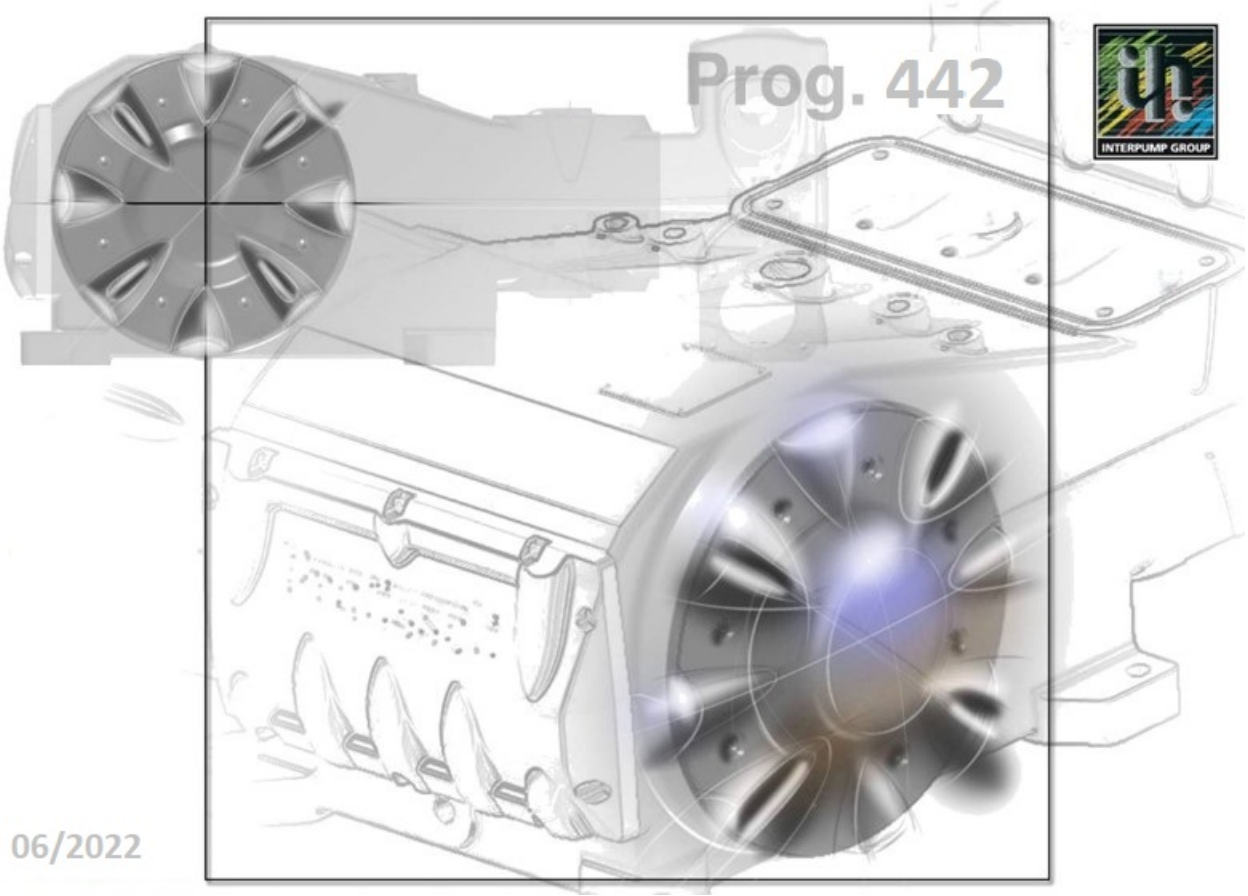

06/2022

INTERPUMP GROUP

Pratissoli

THE NEW MXS - MXX

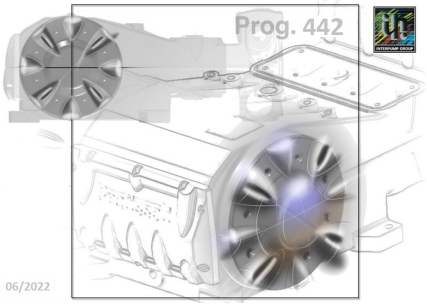

162 kW

220 hp

In the course of 2022 the MXS and MXX pumps will be proudly introduced in the Pratissoli pump line up. The new power end design allows for different ratings off the same power frame to provide two power classes: MXS 220 HP and MXX 190 HP

INTERPUMP GROUP

Pratissoli

THE NEW MXS - MXX

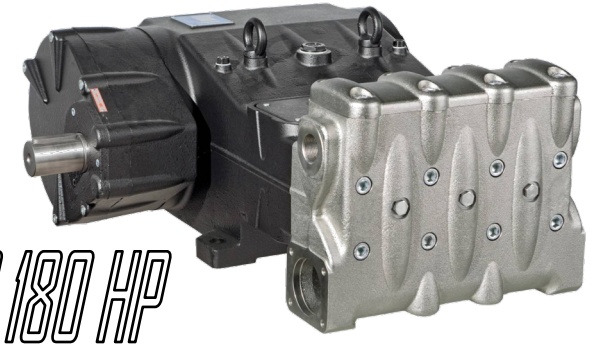

MK2S 180 HP

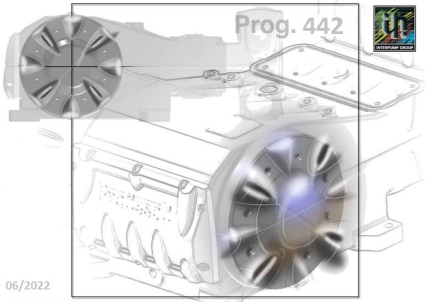

Now the line is complete !
The MXS-MXX fill the gap in between the current 180 Hp and 300 Hp pump.

MXX 190 HP
MXS 220 HP

SR 300 HP

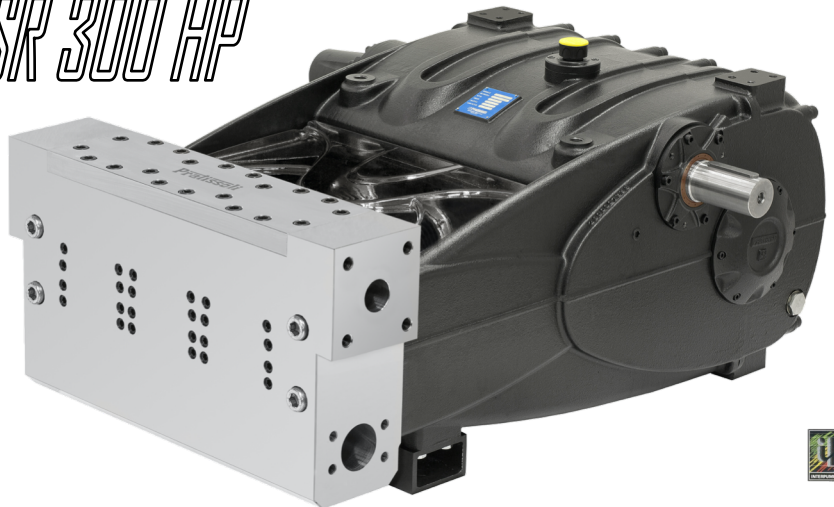

INTERPUMP GROUP

Pratissoli

THE NEW MXS - MXX

The MXS-MXX are triplex, horizontal, hi-flow medium pressure pumps rated up to 200 bar - 2900 psi. Further versions up to 400 bar will be introduced early 2023.

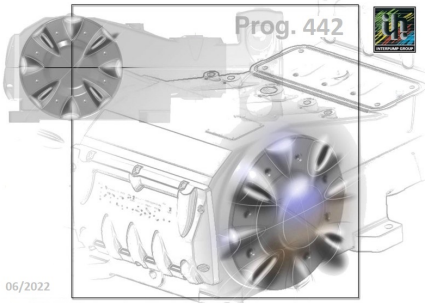

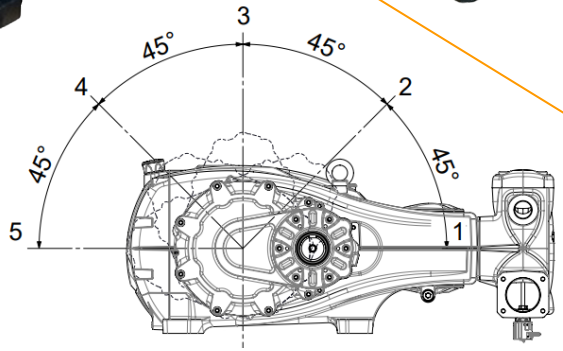

162 kW
220 hp

The positionable gear box makes installation in a truck an easy exercise while the forced lubrication by the integrated oil pump with spin-on filter make the MKS - MXX the perfect match for a variety of heavy duty industrial applications.

INTERPUMP GROUP

Pratissoli

THE NEW MXS - MXX

Long strokes for a better volumetric efficiency (85 mm. MXS and 74 mm. MXX)

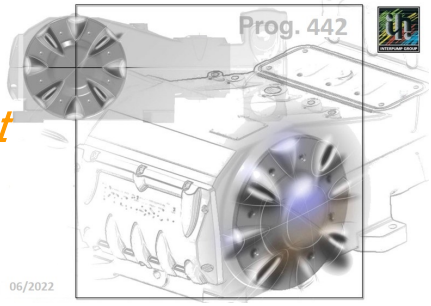

Integrated oil pump to ensure perfect lubrication under any working condition. Both directions of rotation are allowed.

Heavy duty gear box, radial load such as pulley/belt drive or pneumatic clutches is allowed.

Spin-on oil filter, a cleaner oil for longer time trouble-free operations.

162 kW

220 hp

INTERPUMP GROUP

Pratissoli

THE NEW MXS - MXX

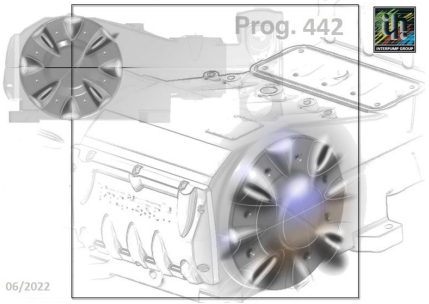

The manifold material is AUSTEMPERING cast iron for a great resistance against cavitation and wash out effects

Solid ceramic plungers come standard with any MXS-MXX version

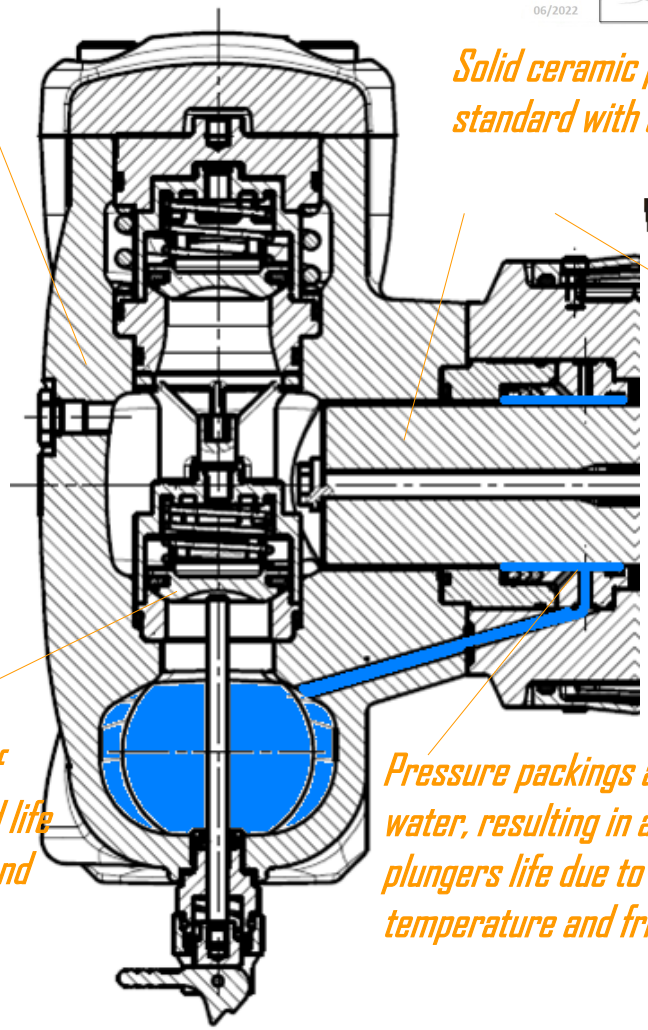

The round pattern of sealing areas extend life of both valve disks and valve seats.

Pressure packings are lubricated by inlet water, resulting in a longer packings and plungers life due to a lower operating temperature and friction produced.

162 kW
220 hp

INTERPUMP GROUP

Pratissoli

THE NEW MXS - MXX

Suction-delivery valves innovative design allows the volumetric efficiency to exceed 95% up to 97% depending on plunger size.

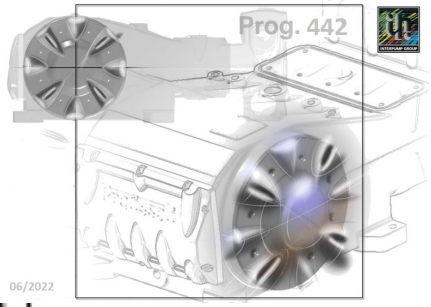

The round pattern of sealing areas and a polymer ring, hydrocarbon resistant, included in the valve disk, dampens the noise generated by the valve work.

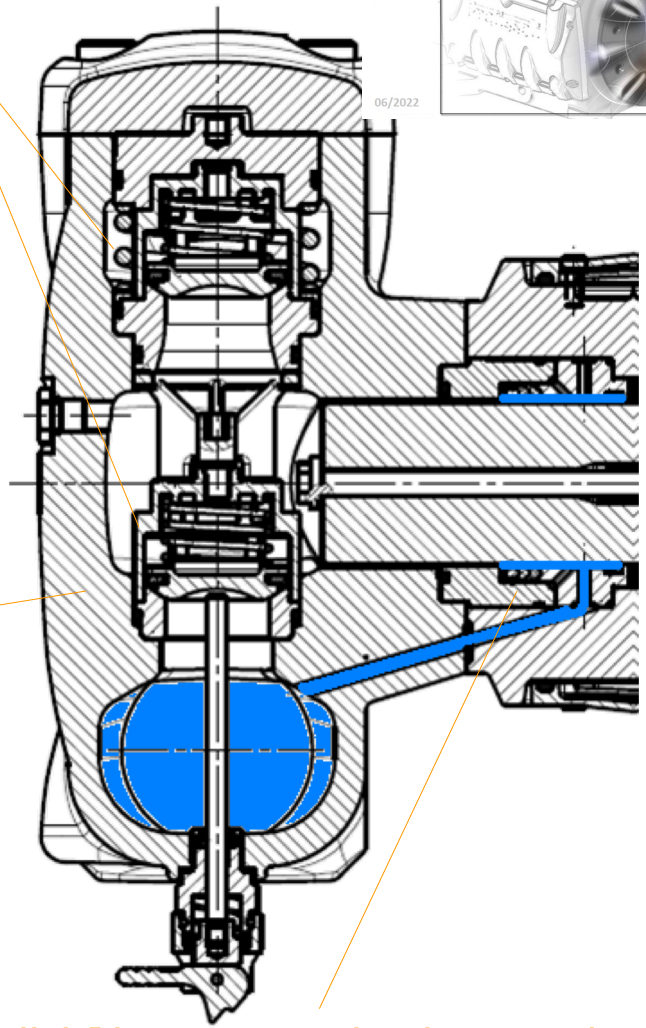

The manifold design reduces inside dead volumes thus increasing volumetric efficiency, reducing the risk of cavitation and contributing for a noise reduction.

High & Low pressure packing design provides a water seals against air suction from the rear of the cylinder during the suction stroke.

162 kW
220 hp

Pratissoli

THE NEW MXS - MXX

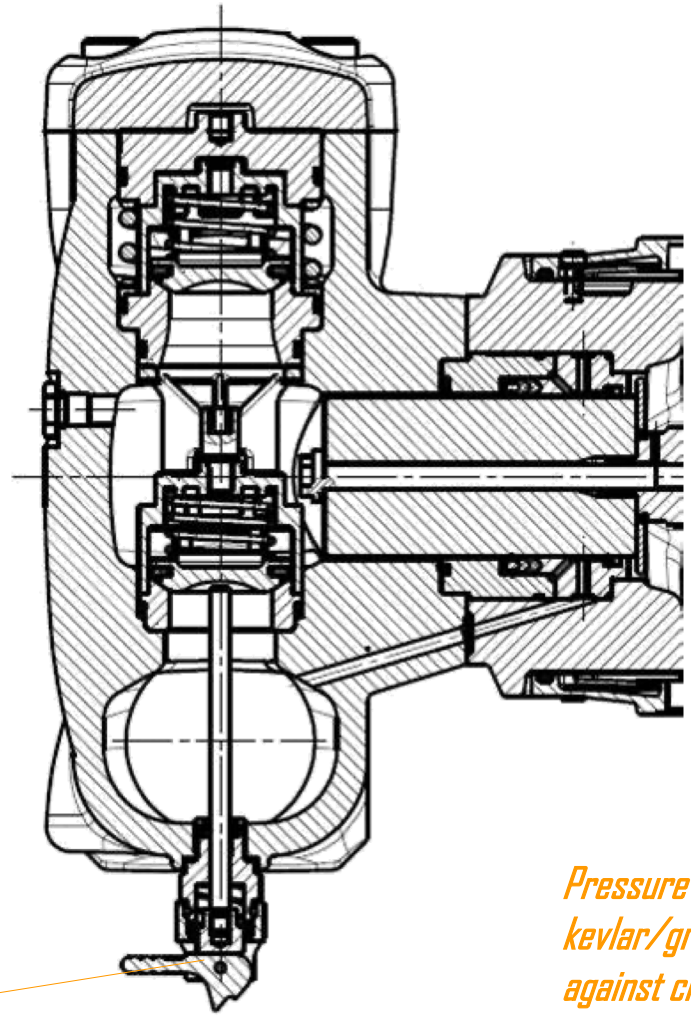

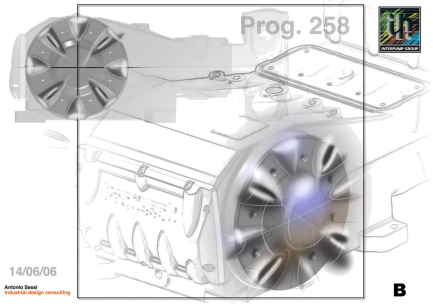

Pressure packings are made of kevlar/graphite for improved resistance against charged water.

The drain valve kits are standard with the MXS - MXX and supplied in the box along with the pump.

INTERPUMP GROUP

Pratissoli

THE NEW MXS - MXX

PERFORMANCES & WEIGHT

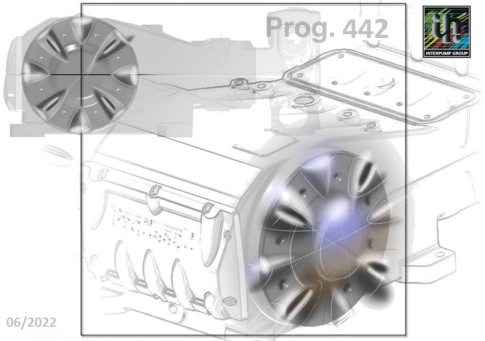

MXS 220 HP

Tipo pompa Pump type	Portata Volume		Pressione Pressure		Riduttore Gear box	Potenza Power		Peso Weight	Dimensions
	l/min	US gpm	bar	psi		hp	kw	Kg	mm.
MXS 40	216	57,1	400	5800	1500 rpm: R=1:2,21 1800 rpm: R=1:2,67 2200 rpm: R=1:3,28	225	165	510	980x862x404
MXS 45	274	72,3	300	4350		213	157	510	980x862x404
MXS 50	338	89,3	250	3600		219	161	510	980x862x404
MXS 55	409	108	200	2900		212	156	525	993x862x404
MXS 60	487	129	170	2450		215	158	525	993x862x404
MXS 65	571	151	150	2200		223	164	525	993x862x404

MXX 190 HP

Tipo pompa Pump type	Portata Volume		Pressione Pressure		Riduttore Gear box	Potenza Power		Peso Weight	Dimensions
	l/min	US gpm	bar	psi		hp	kw	Kg	mm.
MXX 40	188	49,7	400	5800	1500 rpm: R=1:2,21 1800 rpm: R=1:2,67 2200 rpm: R=1:3,28	196	144	510	980x862x404
MXX 45	238	63,0	300	4350		186	137	510	980x862x404
MXX 50	294	77,7	250	3600		192	141	510	980x862x404
MXX 55	356	94,0	200	2900		185	136	525	993x862x404
MXX 60	424	111,9	170	2450		188	138	525	993x862x404
MXX 65	497	131,4	150	2200		193	142	525	993x862x404

INTERPUMP GROUP

Pratissoli

THE NEW MXS - MXX

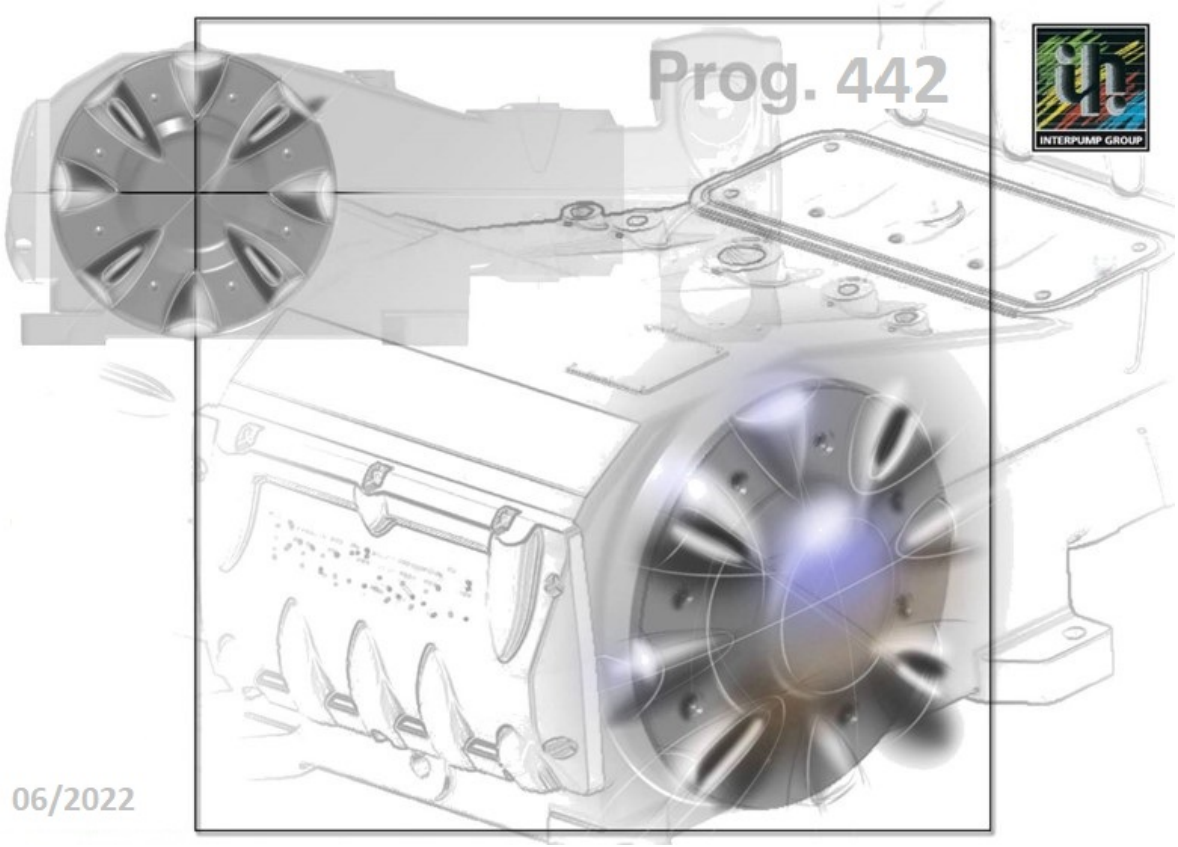

Thank you for your attention.